Data Sheet

Itemnumber....: 3222800209

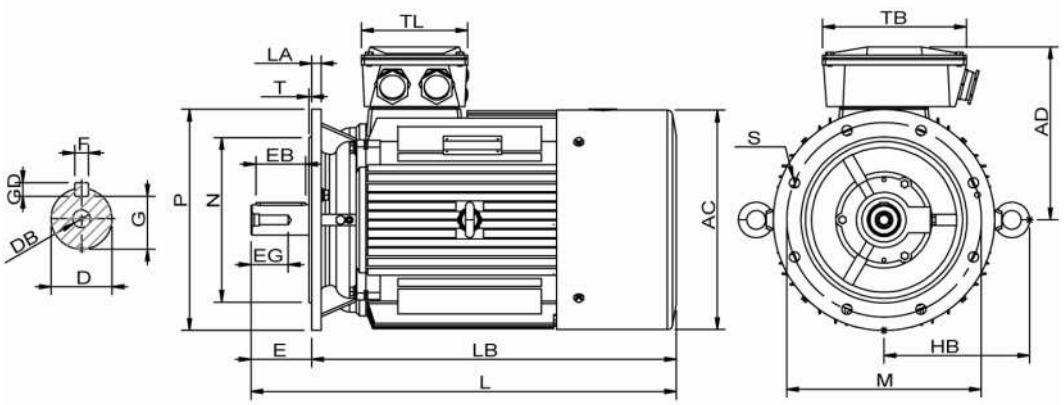

AC = 546	**DB = M20**	**EG = 56**	**GD = 11**	**L = 965**	**M = 500**	**S = 8-Ø18.5 TL = 230**
AD = 403	**E = 140**	**F = 18**	**H = 280**	**LA = 22**	**N = 450**	**T = 5**
D = 65	**EB = 110**	**G = 58**	**HB = 362**	**LB = 825**	**P = 550**	**TB = 305**

Version
Type.....: HMC2 280S-2
Design.....: Induction motor
Standard series.....: IEC 60034
Phase / Voltage range.....: 3~ / Low

Electrical design
Efficiency.....: IE2
Pole.....: 2
Power at 50 Hz (kW).....: 75,0
Hz.....: 60 (60 Hz output)
Voltage.....: 440VD 60 Hz
Winding voltage.....: 400VD/690VY 50 Hz
Power output (kW).....: 87,5
Duty.....: S1
Insulation class.....: F
Temperature rise.....: B

Motor protection
Thermal protection main....: PTC 3x 155 dgr
Thermal protection second..: None
Space heater.....: 1x 230V
Temperature detector.....: No
SPM.....: No
IR wire.....: No
Tropical insulation.....: Yes

Explosion protection
According to.....: None

General
Direction of rotation.....: CW
Painting.....: RAL 9005 Gloss 10
Nameplate.....: Multivoltage + VFD
Special packing.....: No
Special requirements.....: No

Mechanical design
Frame size.....: 280
Mounting.....: B5
Rain cap.....: No
Protection class.....: IP55
Cooling method.....: IC411/TEFC
External grounding.....: Yes
Drain hole.....: Yes
Frame material.....: Cast Iron
Material approval.....: None
Shaft.....: IEC Standard
Key.....: Closed key
Balancing.....: Half key balancing
Vibration class.....: Grade-A
Weight (kg).....: 525

Environment condition
Ambient temp. min. (°C)..: -20
Ambient temp. max. (°C)..: 45
Altitude (mtr up to).....: 1000

Bearing
DE Bearing.....: 6314/C3
NDE Bearing.....: 6314/C3
Fixed bearing.....: DE

Terminal box
Tbox position.....: Top
Cable entry direction.....: Right (from DE)
Cable entry
Main.....: 2 x M63x1,5
Ø37-44mm metal
Accessory.....: 2 x M20x1,5
Metal blindcaps
Connection type.....: Delta (D)
Terminal board thread.....: 6-M10

Test values
Rotor inertia (kgm²).....: 0,71
Noise level (dB(A)).....: 81
No load current (A).....: 35,5
Winding resist. (ohm).....: 0,073
Starting time (sec.).....: 0,38
Temp. rise winding (K).....: 69
Temp. rise surface (K).....: 50

Rated power (kW) .....:	75,0	73,0	90,0	87,5
Frequency (Hz) .....:	50	50	60	60
Voltage (V) .....:	400 690	380 660	480 830	440
Connection .....:	D Y	D Y	D Y	D
Full load current (A) ...:	130 74,5	132 76,5	130 74,5	136
Speed (rpm) .....:	2970	2970	3550	3550
Power factor cos(phi) ...:	0,91	0,91	0,91	0,91
Efficiency, 100/75/50 (%) :	93,0/93,1/92,2	93,0/93,1/92,2	93,0/93,1/92,2	92,6/92,7/91,8
Ist/In .....:	7,3	6,4	7,3	6,7
Full load torque (Nm) ...:	240	234	240	234
Tst/Tn .....:	2,3	2,1	2,3	2,0
Tmax /Tn .....:	3,6	3,3	3,6	3,1
Duty .....:	S1	S1	S1	S1
Ambient temp. (°C) .....:	40	45	40	45

Data are not binding. Hoyer reserves the right to implement changes without notice. The extent of data are not equivalent to nameplate on the motors.