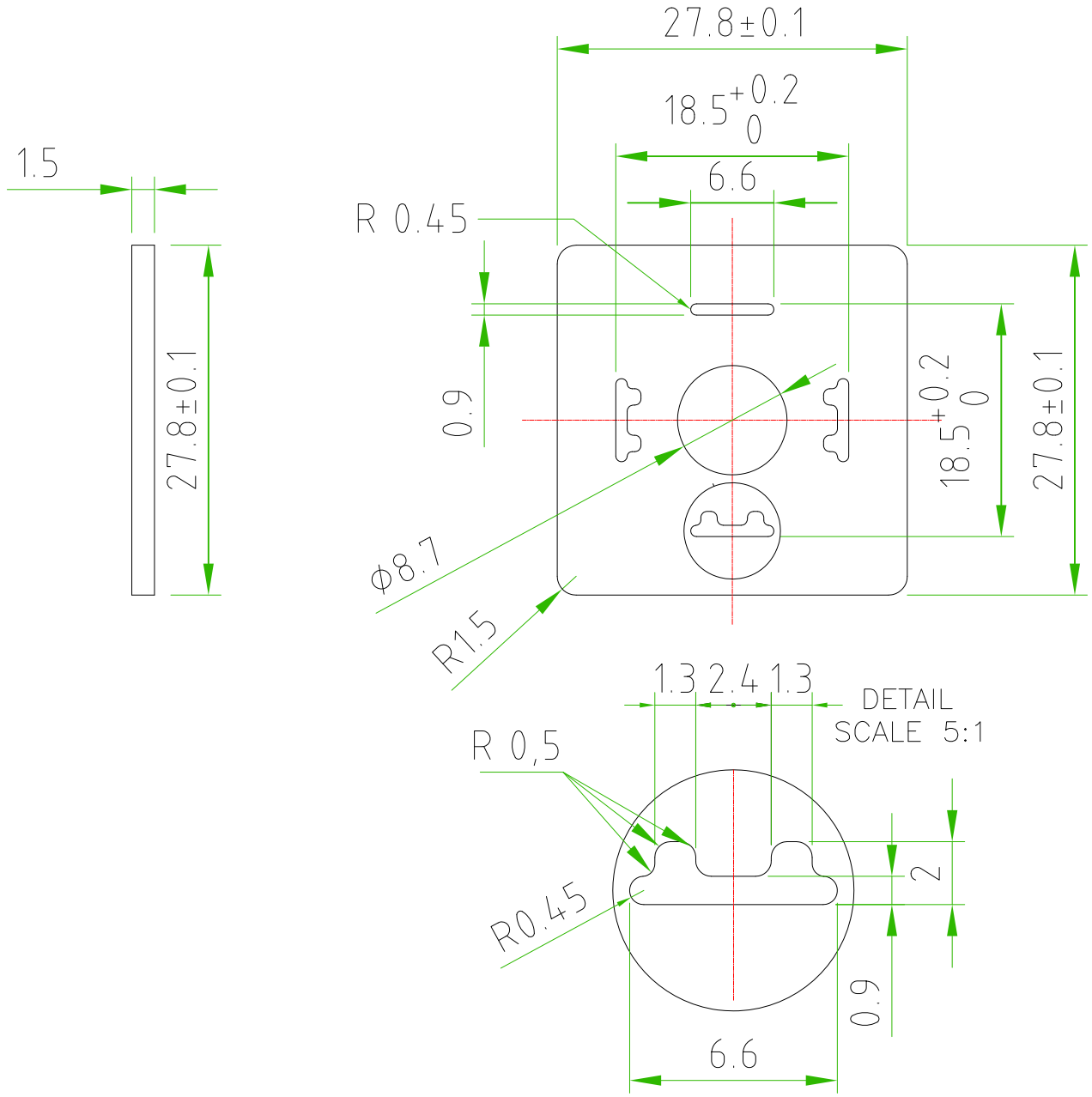

GASKET FEATURES		
	PRODUCT TYPE	SQUARE GASKET FOR EN25301-803 (TYPEA)CONNECTOR
	GASKET MATERIAL	SILICON
	GAKET COLOUR	WHITE
	TEMPERATURE RANGE	FROM -40°C TO +125°C
	PACKAGING	50PCS IN PLASTIC BAG

CUSTOMER APPROVAL	
SIGNATURE	DATE
PLEASE SIGN AND RETURN	

Rev.	Modify	Date	Signed	Approved

Rev.	Modify	Date	Signed	Approved

Rev.	Modify	Date	Signed	Approved

A4

Designer	SUGLIANI R.	Date	2016-06-20	Tollerance	±0.1	Units:	mm	Series	ACCESSORIES	Drawing n.
Approved	CIMMINO L.	Date	2016-06-20	Scale	2:1	Size:	A4	Customer code:		1-1

HTP High Tech Products S.R.L.

DESCRIPTION

FLAT WHITE SILICON GASKET FOR CONNECTOR EN175301-803(type-A)

H.T.P.PART NUMBER

10001400G

H.T.P. High Tech Products S.R.L. Via Lesina,45 -24030- Brembate di Sopra (Bg) - ITALY Phone:+39.035692509 Fax:+39.035203291 E-mail: info@webhtp.eu Web: http://www.webhtp.eu/

ALL RIGHTS ARE RESERVED.